SiGe/Si Solid State Power Amplifiers

P. Bhattacharya and L. P. B. Katehi

Department of Electrical Engineering and Computer Science

University of Michigan, Ann Arbor, MI 48109-2122

SOAC Program Kick-Off Meeting NASA/JPL, April 1998

SiGe/Si HBT Epitaxial Structure

- **Structure**

Emitter Contact	Si	n+	1e19	2000 Å
Emitter	Si	n	2e18	1000 Å
Spacer	SiGe	i		50 Å
Base	$Si_{1-x}Ge_x$	p+	1e20	200Å
Spacer	SiGe	i		50 Å
Collector	Si	n-	5e15	3000 Å
Subcollector	Si	n+	1e19	1.5 μm
Substrate	Si	p-	2e12	540 μm

- **SRA measurement**

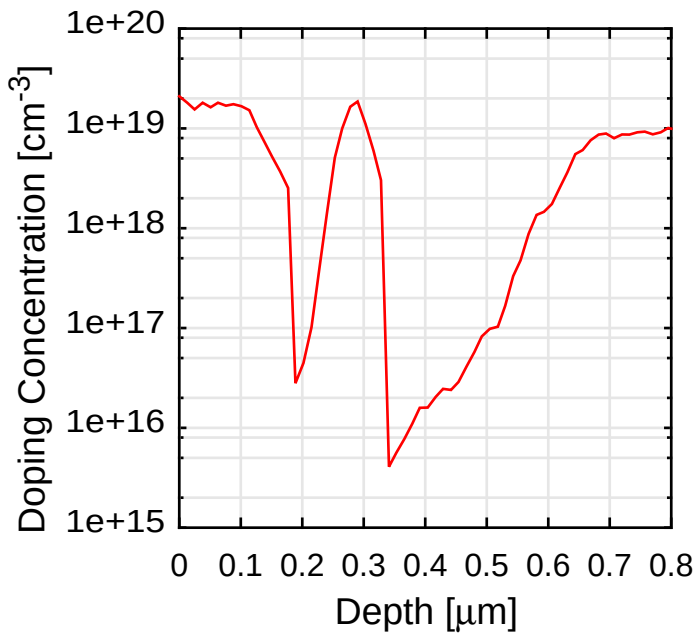

- ➤ **All layers grown by MBE except for subcollector layer(CVD)**
- ➤ **r_{growth}=2Å/sec for emitter and collector, 0.8Å/sec for base**
- ➤ **T_{growth}= 415˚C for emitter and collector, 550˚C for base**
- ➤ **$P_{background}$= 6×10^{-9} torr**

Characteristics of Fabricated SiGe/Si HBT

- **I-V Characteristics**

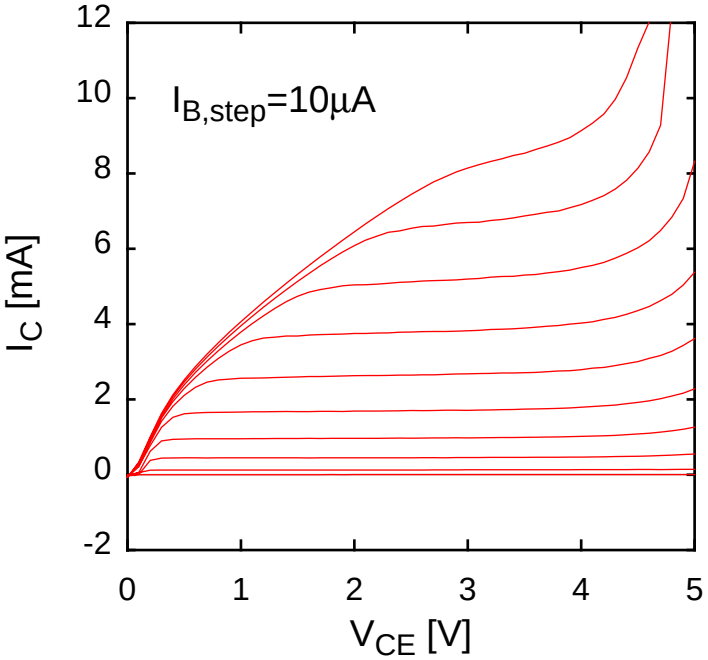

- ➤ A_E= 5×5 μm^2, A_{BC}= 12×13 μm^2
- ➤ BV_{CEO} ~ 5 V
- ➤ Kirk effect at low V_{CE}

- **Gummel Plot**

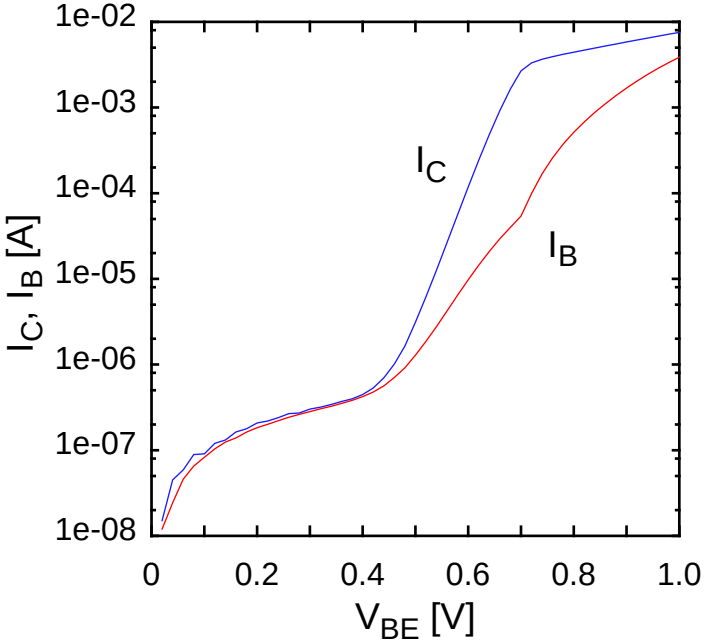

- ➤ n_C= 1.04, n_B= 1.79

- **Current Gain**

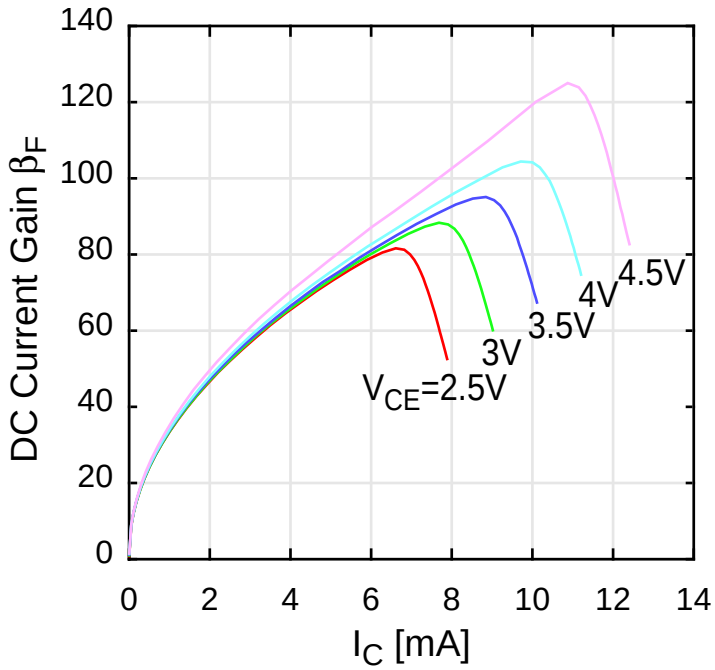

- **Frequency Response**

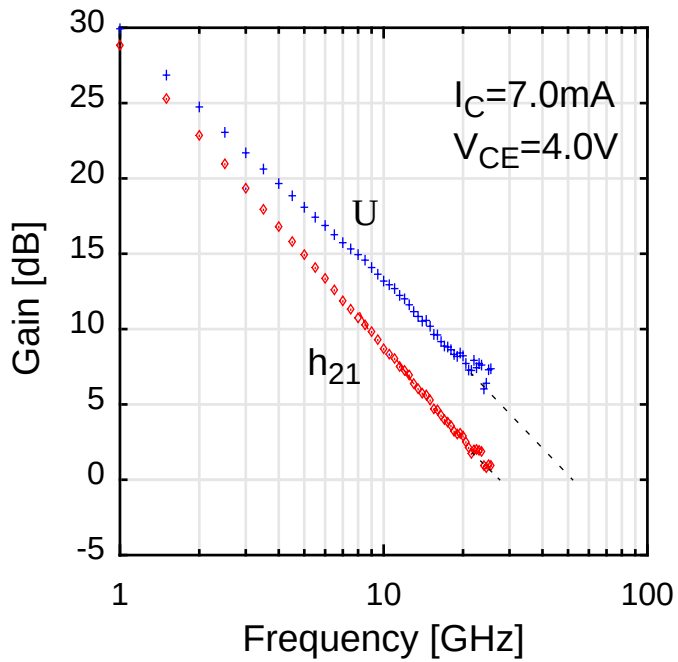

- ➤ β_F**(DC gain) ~100**
- ➤ β_0**(Differential gain) ~200**

- ➤ f_T**=28.0 GHz**
- ➤ f_{max}**=51.8 GHz**

Small Signal Model of SiGe/Si HBT

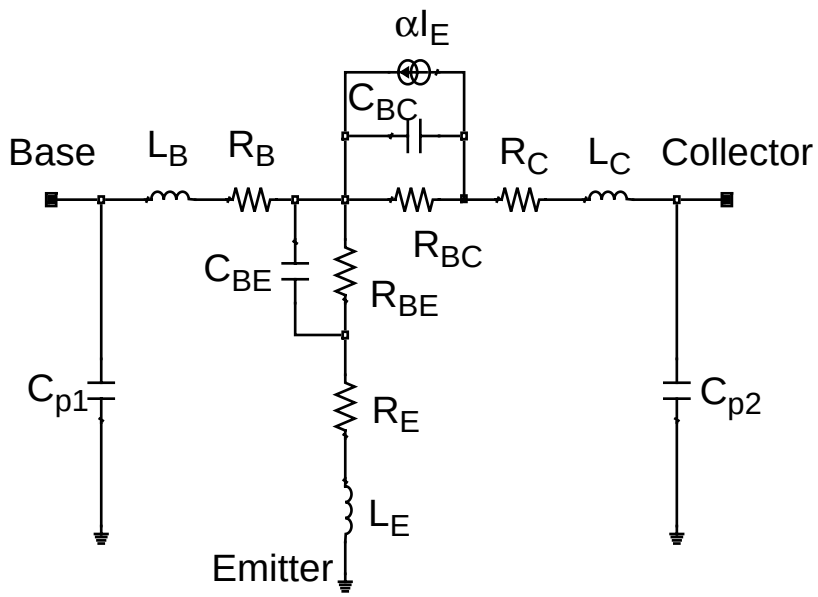

V_{CE}	4 V
I_C	7.4 mA
I_B	80 μA
R_B	13.1 Ω
L_B	62.6 pH
R_{BE}	1.0 Ω
C_{BE}	106.8 fF
R_E	15.8 Ω
L_E	141.7 pH
R_{BC}	127.0 kΩ
C_{BC}	28.9 fF
R_C	24.8 Ω
L_C	66.1 pH
$C_{p1,2}$	4.0 fF
α_o	0.995

Single-stage X-band SiGe/Si Monolithic Amplifier

- **Circuit Schematic**

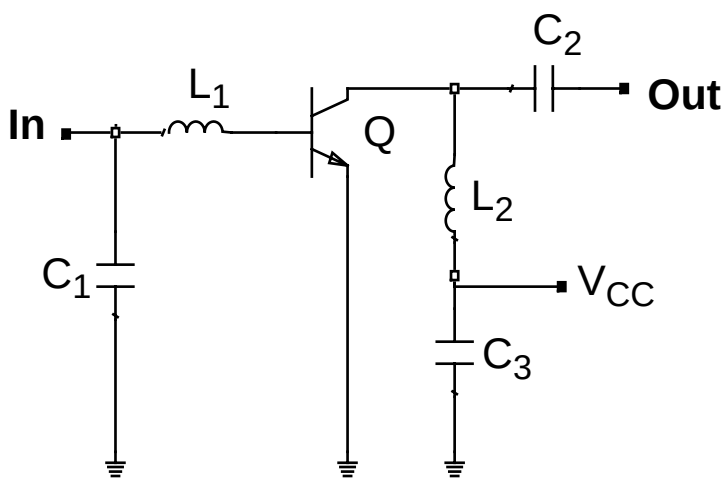

- **Gain and Return Losses**

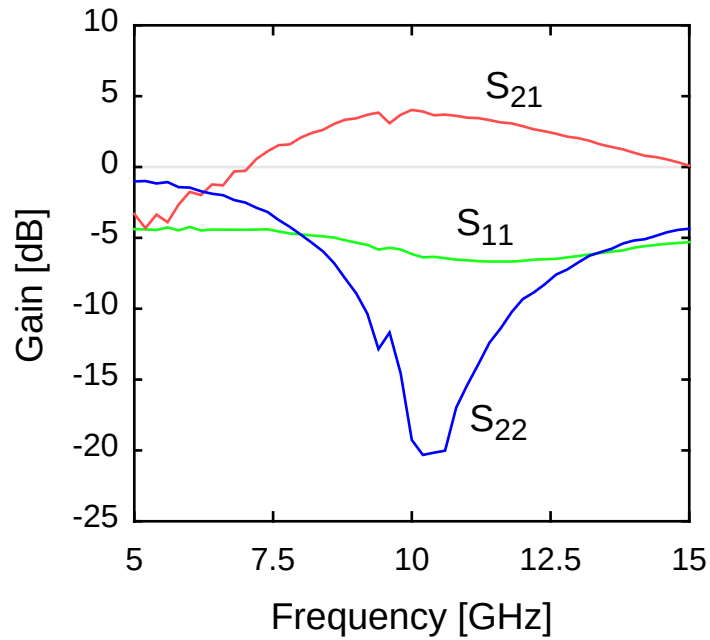

- ➤ **S_{21}=4.03 dB @10.0 GHz**
- ➤ **$VSWR_{in}$=2.73**
- ➤ **$VSWR_{out}$=1.21**

Single-stage Ku-band SiGe/Si Monolithic Amplifier

- **Gain and Return Losses**

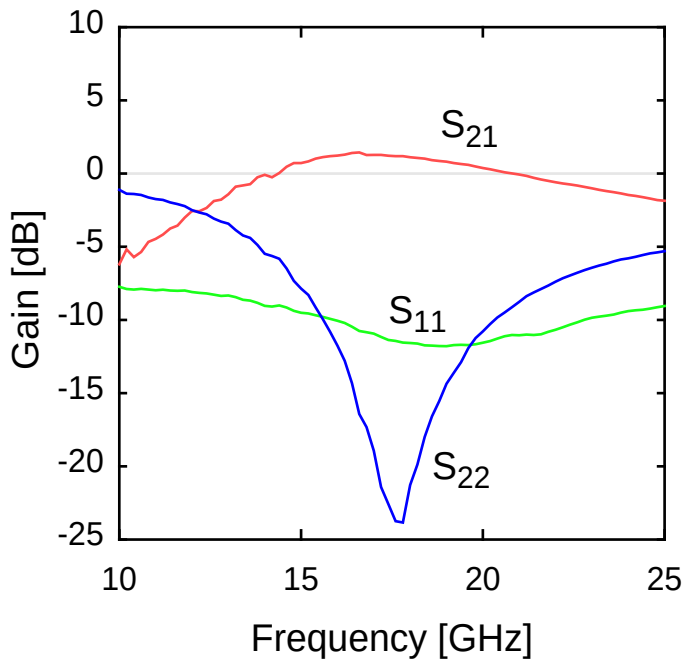

➤ **S_{21}=1.44 dB @16.6 GHz**

- **$VSWR_{in}$ and $VSWR_{out}$**

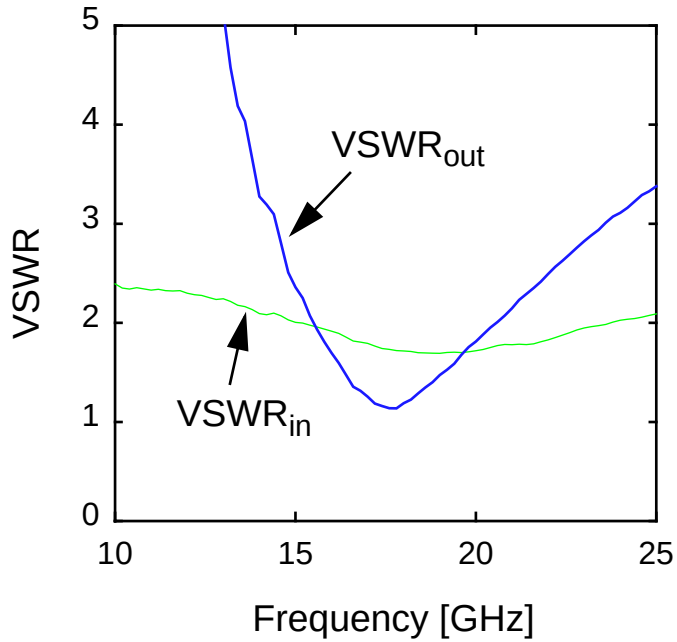

➤ **$VSWR_{in}$=1.69**

➤ **$VSWR_{out}$=1.14**

Three-stage X-band SiGe/Si Monolithic Amplifier

- **Circuit Schematic**

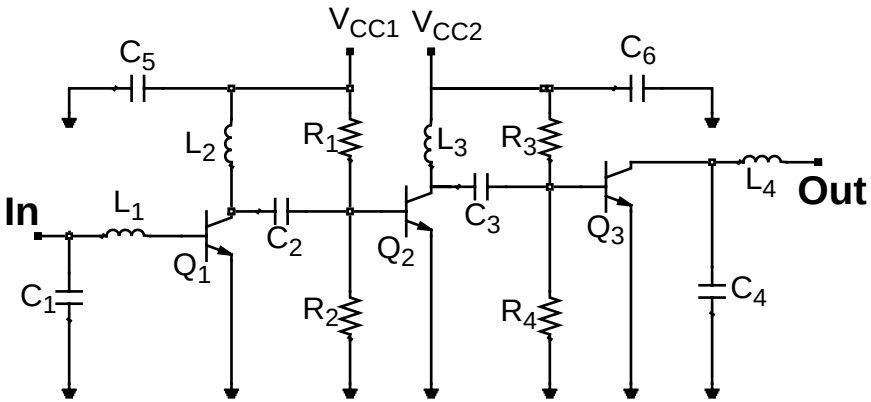

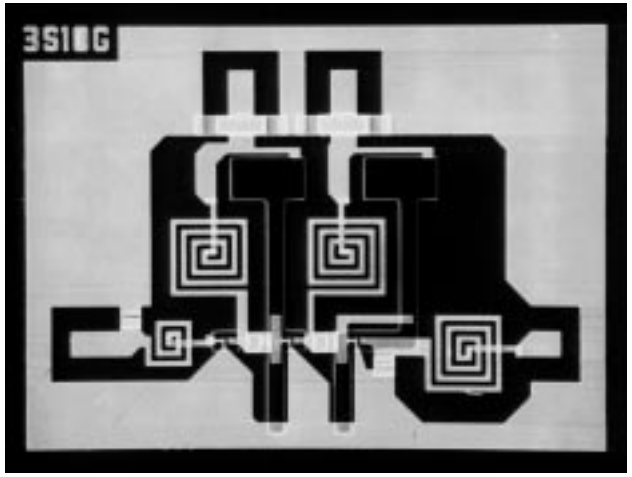

- **Gain and Return Losses**

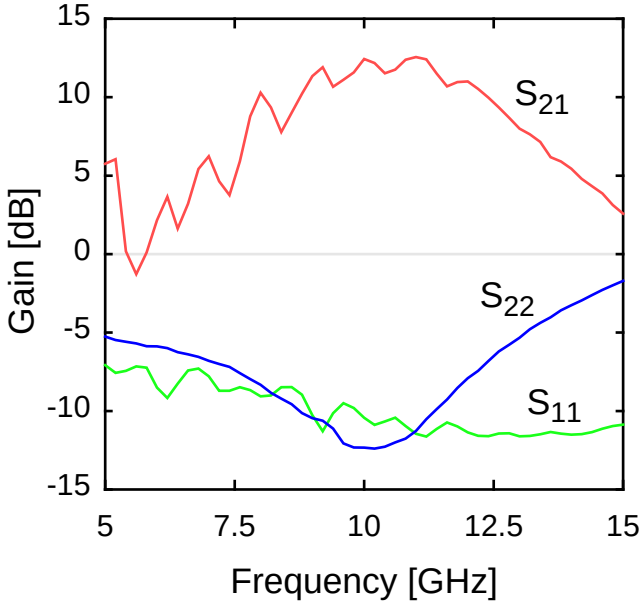

- ➤ **S_{21}=12.62 dB @10.0 GHz**
- ➤ **$VSWR_{in}$=1.71**
- ➤ **$VSWR_{out}$=1.63**

Characteristics of Dual-feedback SiGe/Si Transimpedance Amplifier

- **Circuit Schematic**

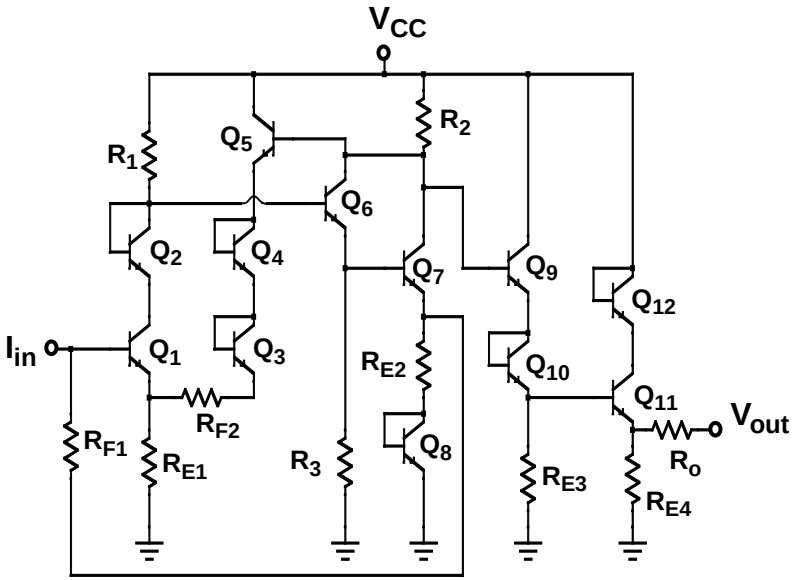

➤ R_{F1}=200 Ω, R_{F2}=150 Ω
R_{E1}= 10 Ω, R_{E2}=10 Ω,
R_{E3}=700 Ω, R_{E4}=550 Ω, R_o=50 Ω
R_1=300 Ω, R_2=100 Ω, R_3=550 Ω

- **Frequency Response**

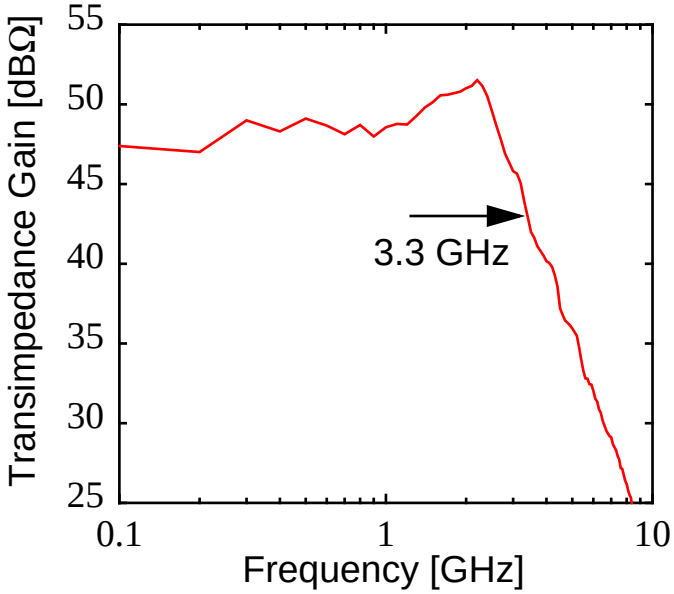

➤ Gain= 47.4 dBΩ
➤ BW = 3.3 GHz @V_{CC}= 7 V

Characteristics of SiGe/Si PIN-HBT Photoreceiver

- **Circuit Schematic**

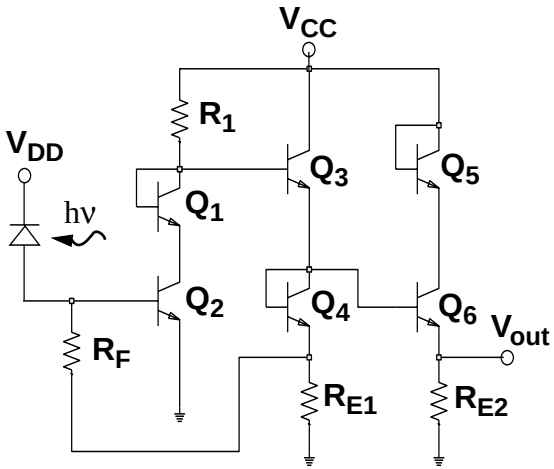

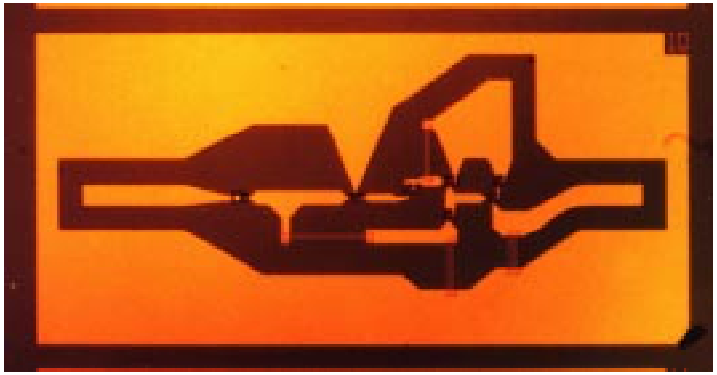

- **Frequency Response**

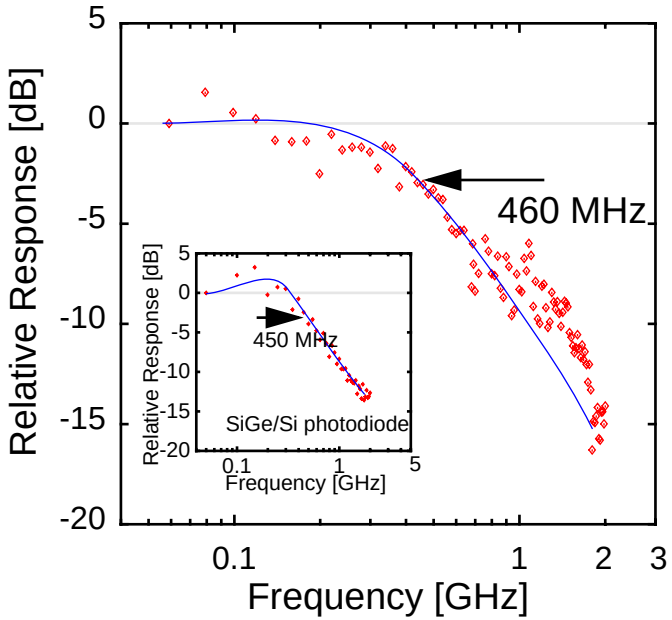

➤ **BW = 460 MHz**
@V_{CC}=6 V, V_{DD}= 9 V

Solid State Electronics Laboratory
The University of Michigan

Reliability Test of SiGe/Si HBT

- **Test Setup**

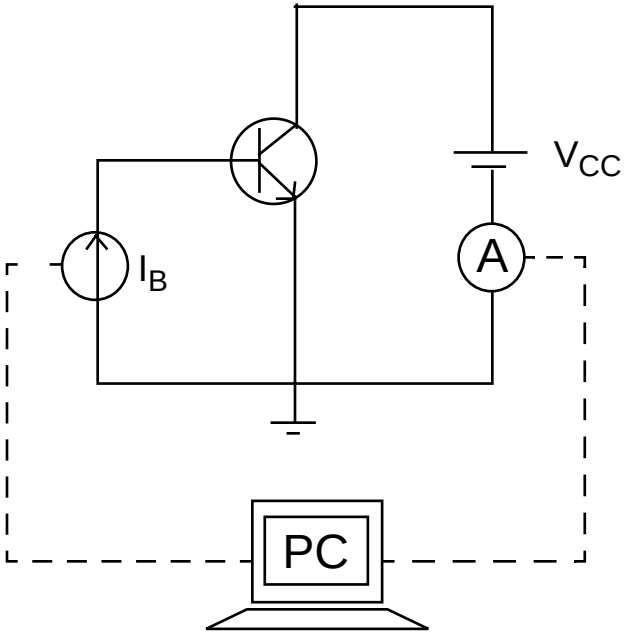

- **Current Gain**

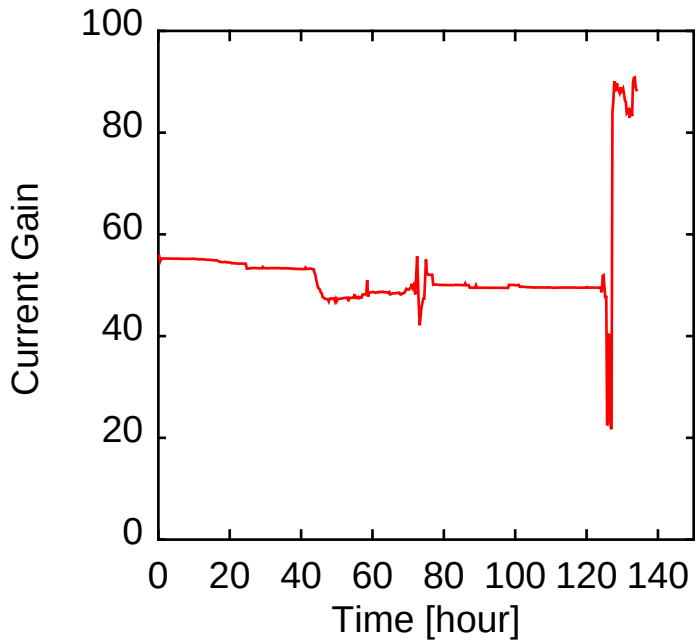

➤ **Feedback control for constant I_C by adjusting I_B**

➤ **V_{CC}= 3V, J_C= 13.5 kA/cm^2, T= 175˚C**

Solid State Electronics Laboratory
The University of Michigan

Influence of Thermal Bias Stress on HBT Characteristics

- **I-V Characteristics**

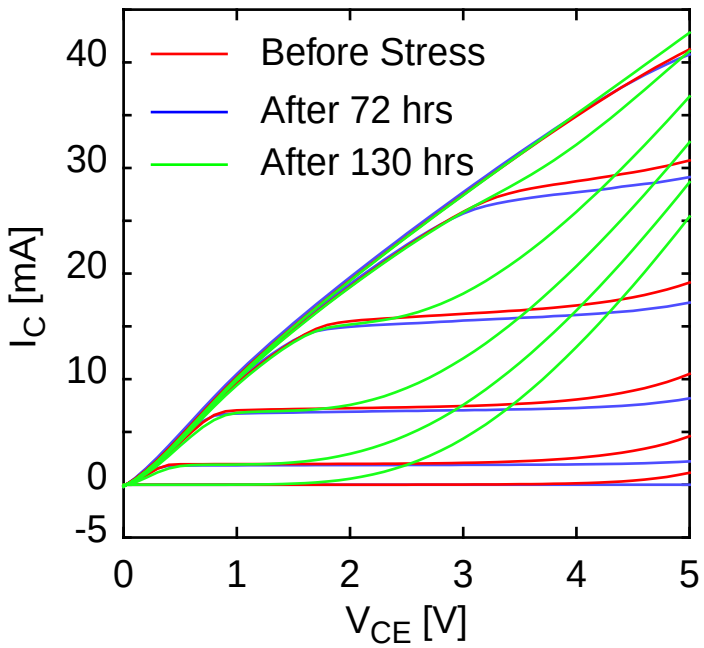

- **Frequency Response**

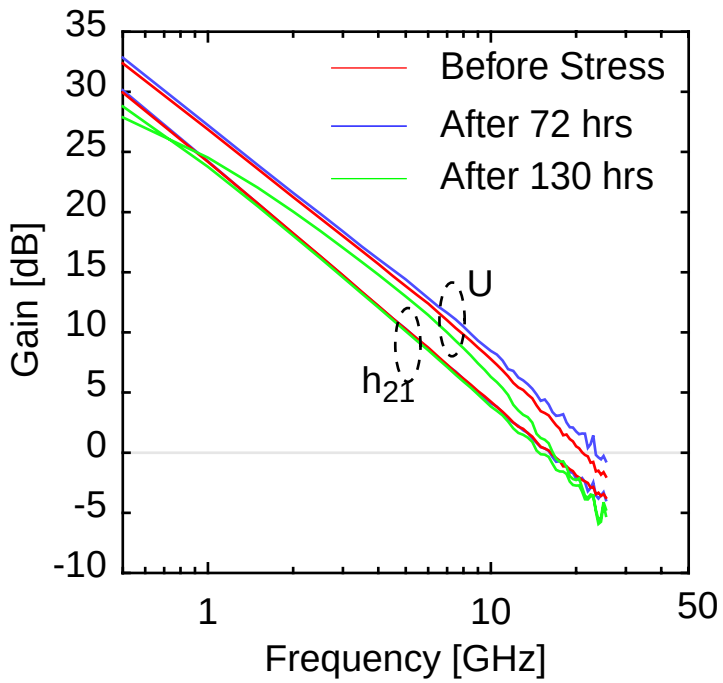

Specifications of SiGe/Si Power Amplifiers

- **Operation Frequency**
  - **X-band (10 GHz)**
  - **Ka-band (30 GHz)**
- **Gain**
  - **G = 37 dB**
- **Output Power**
  - **P_o = 10 W**
- **Supply Voltage**
  - **V_{CC} = 5 V**

Structure of SiGe/Si Power HBT

- **Epitaxial Structure**

Emitter Contact	Si	n+	1e19	2000 Å
Emitter	Si	n	2e18	1000 Å
Spacer	SiGe	i		50 Å
Base	$Si_{1-x}Ge_x$	p+	1e20	200Å
Spacer	SiGe	i		50 Å
Collector	Si	n-	1e16	4000 Å
Subcollector	Si	n+	1e19	1.5 μm
Substrate	Si	p-	2e12	540 μm

- **Layout**

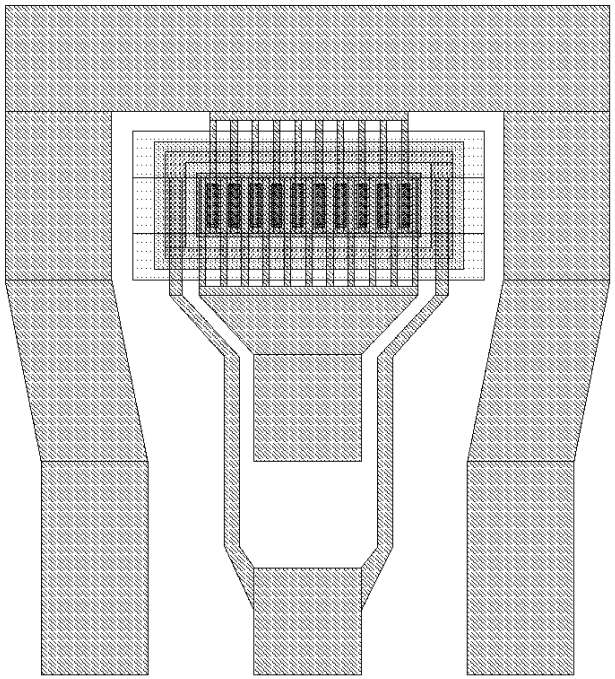

Power HBT Design Considerations

• Collector Doping Concentration N_C

$$P_{max} \sim \frac{1}{8} I_{max} BV_{CEO}$$ for Class-A operation

$$I_{max} \sim q v_s A_{BC} N_C$$ for Kirk Effect Limit ($N_C \sim N_{carrier}$)

$$BV_{CEO} \sim \frac{\varepsilon_s E_C^2}{2qN_C}$$

➪ $$P_{max} \sim \frac{1}{16} v_s A_{BC} \varepsilon_s E_C^2$$

➪ P_{max} is independent or a weak function of N_C

➪ N_C can be optimized for high speed operation

• Collector Thickness W_C

$$W_C \sim x_{d,\,max}$$

$$\sim \frac{\varepsilon_s E_C}{qN_C}$$

• BC Junction Area A_{BC}

$$A_{BC} \sim \frac{16 P_{max}}{v_s \varepsilon_s E_C^2}$$

Configuration of Power Amplifier

• Schematic of Power Amplifier

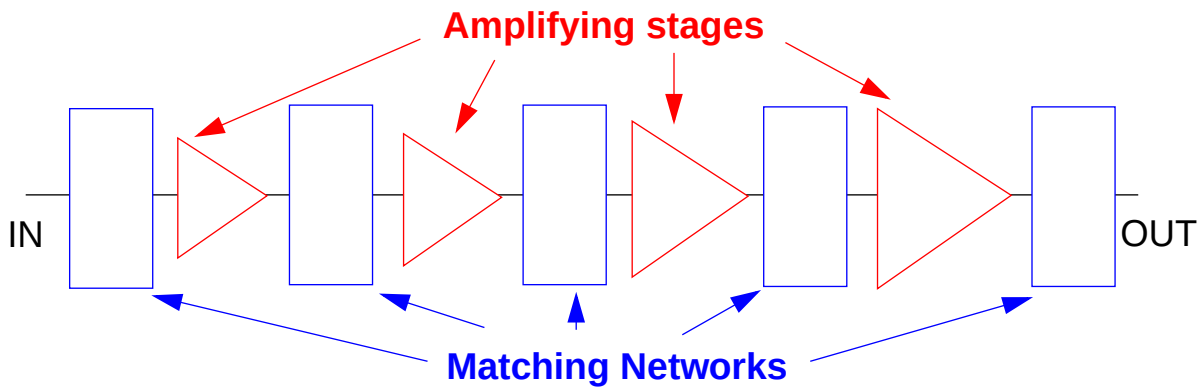

- Last stages need parallel combination of power devices
- Each stage provides 10 dB

• Parallel combination of power devices

- Binary Power Combiner/Divider

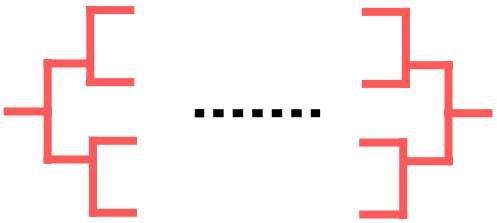

➪ High Combining efficiency

➪ Large area

- Chain Power Combiner/Divider

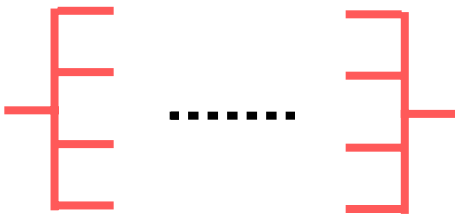

➪ Low Combining efficiency

➪ Small area