NASA/GSFC
UNEX Missions

NASA National University Satellite Programs Workshop
NASA's Jet Propulsion Laboratory

April 4, 2002

NASA's University Class Missions

David Pierce / GSFC
University Class Projects

NASA University Class Missions

- OVERVIEW OF UNIVERSITY CLASS PROJECTS OFFICE
- UNEX/CHIPS STATUS
- FUTURE OF GSFC UNIVERSITY CLASS MISSIONS
- PERSPECTIVE ON FUTURE UNEX LAUNCH OPPORTUNITIES

Overview of NASA's University Class Projects Office

University Class Projects Office

- The University Class Projects Office is Responsible for:
  - Managing the University Explorer (UNEX) Missions
    - Cosmic Hot Interstellar Plasma Spectrometer (CHIPS)
  - *Managed the University Earth System Science (UnESS) missions*
  - Supporting the Explorers and Earth Explorer Programs
  - Leveraging corporate knowledge present at Wallops to manage GSFC university class missions.

University Class Missions

- Project Management of GSFC University Class missions.
  - Serve as a facilitator for the PI to assure Mission Success.
  - Funding Administration, Coordinate Reviews.
  - Advocacy for PI/Mission to GSFC and NASA HQ.
  - Fiduciary Responsibility to NASA to ensure mission is achieved in compliance with committed cost, schedule, performance, reliability, and safety requirements.
  - Provide agreed upon support as requested by the PI.

NASA/GSFC
UNEX Project

Status of UNEX/CHIPS

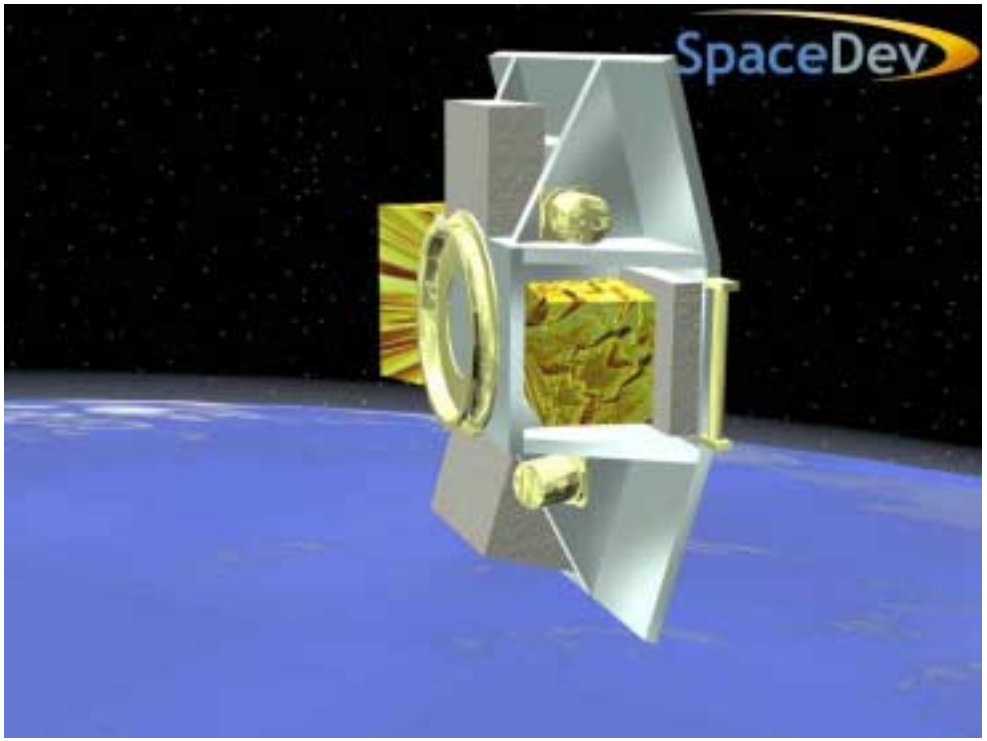

Cosmic Hot Interstellar Plasma Spectrometer (CHIPS)

CHIPS Mission

NASA/GSFC
UNEX Project

Science:	Extreme ultraviolet spectroscopy to determine how the million degree gas cloud surrounding our Solar System cools.
PI/Institution:	Dr. Mark Hurwitz /University of California Berkeley
Spacecraft:	SpaceDev
Orbit:	590 km circular 94deg. Inclination
Mass:	100 Kg
Attitude Control:	3 axis stabilized
Power:	30 watts
Launch:	December 19,2002 from VAFB, SLC-2 Delta – II 7320-10; secondary P/L on ICESat
Mission Ops.:	12 months on orbit/18 months design
Data Downlink:	16 Mbytes/day delivered science data.
Ground Station:	HESSI, Adelaide

CHIPS S/C Configuration

NASA/GSFC
UNEX Project

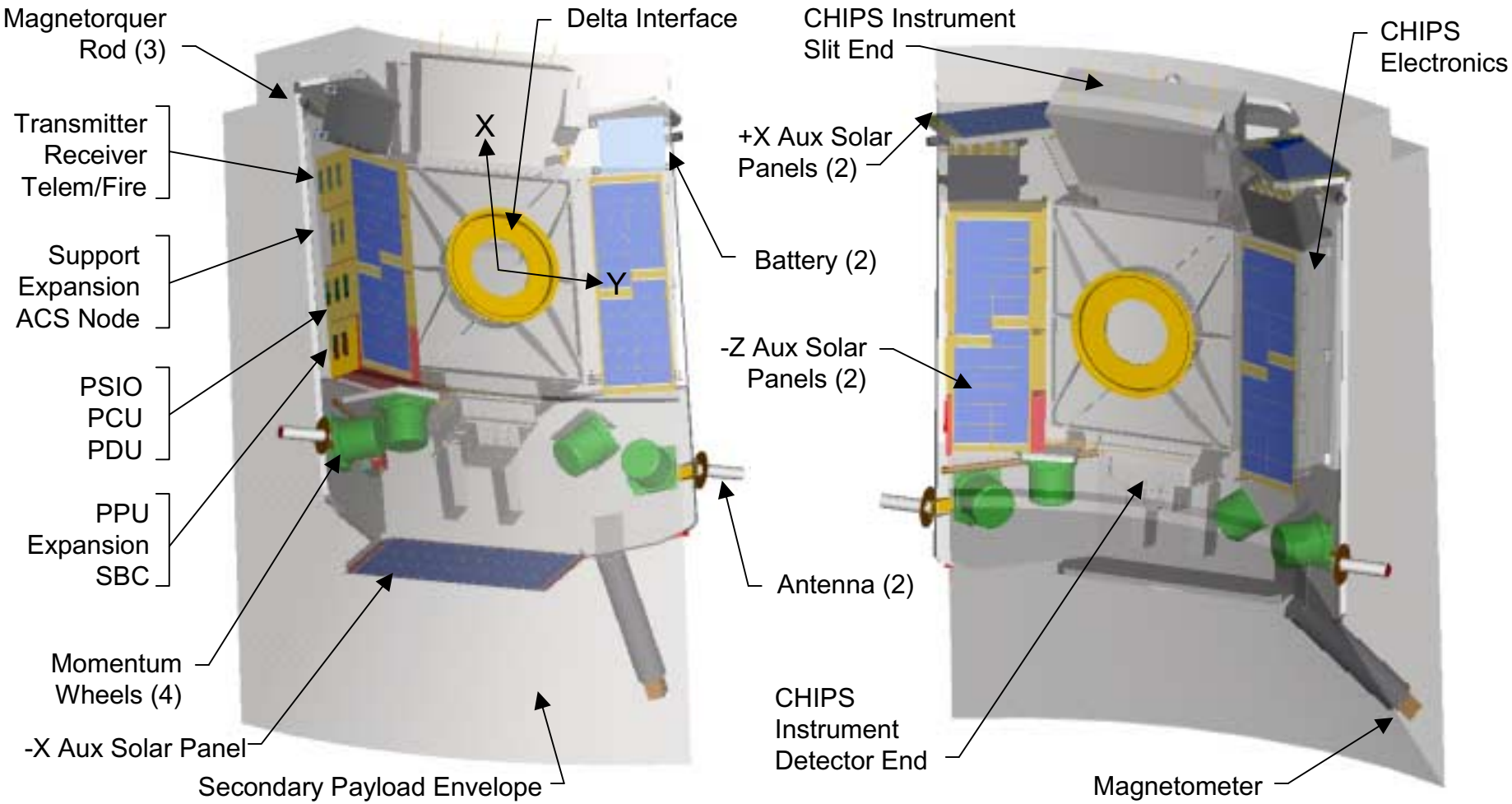

CHIPSat Description

NASA/GSFC
UNEX Project

The CHIPSat bus is primarily of aluminum/aluminum honeycomb construction.

The three main solar panels and six auxiliary solar panels are all body-mounted. There are no deployables.

The CHIPS spectrometer resides in the central cavity of CHIPSat and is attached with a 3-point mount.

CHIPSat will be separation-switch enabled after launch. CHIPSat is 3-axis stabilized, utilizing reaction wheels and magnetorquer rods.

SPACECRAFT STATUS

CHIPS **4/2/02**

- CHIPS spacecraft at UC Berkeley being exercised
- Environmental Testing to be performed at AFRL/KAFB 6/2002. Working to be in storage by end of August

INSTRUMENT STATUS

CHIPS **4/2/02**

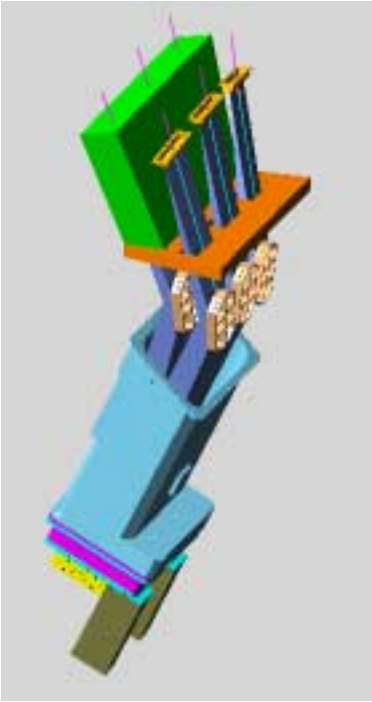

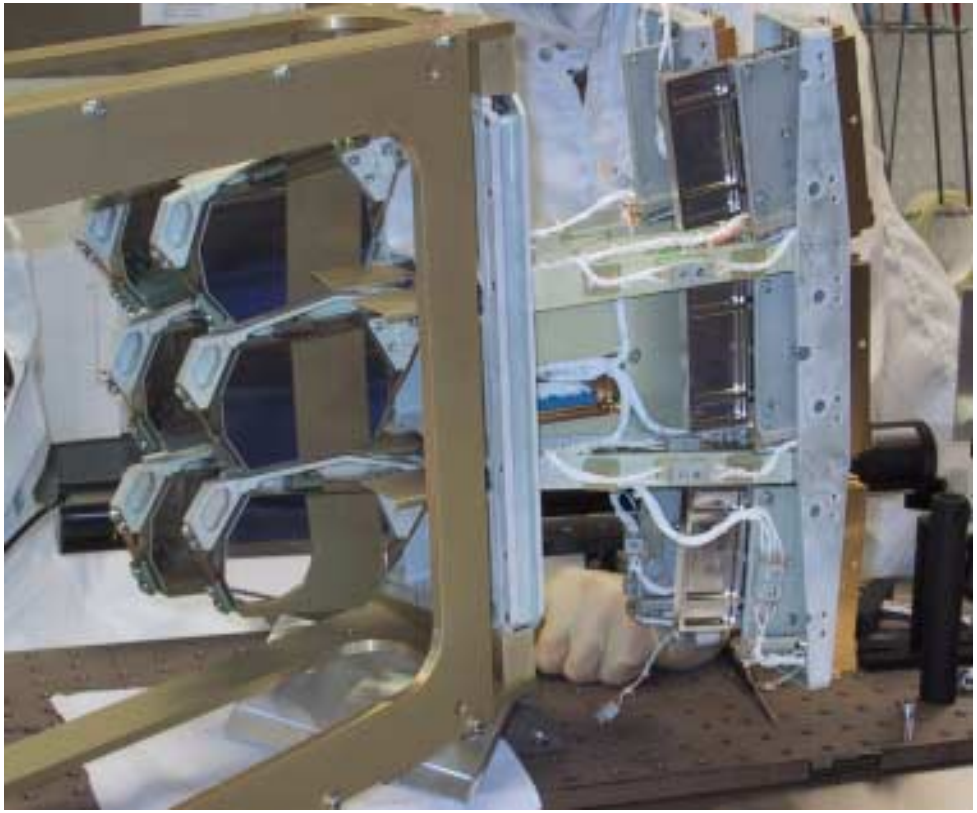

CHIPS Instrument optics integrated and undergoing Vibration Testing

LAUNCH STATUS

- Launch December 2002 with ICESat

CHIPS in mini DPAF

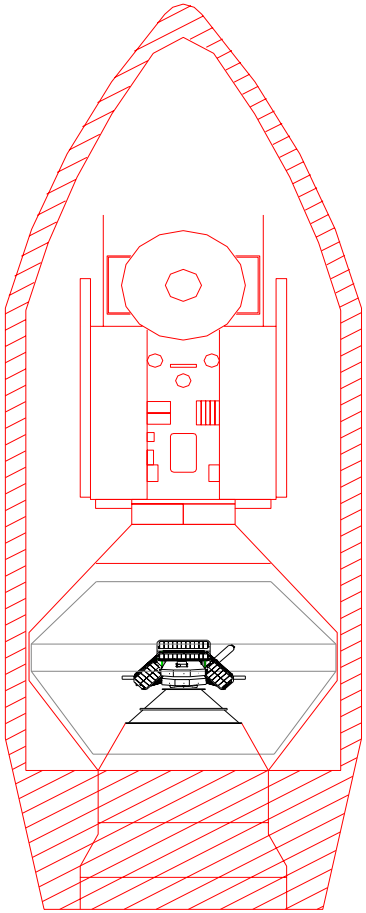

CHIPS Secondary P/L Ground Rules

- Minimum risk approach (do no harm to ICESAT)
- CHIPS is powered off until after separation
- CHIPS will not cause a launch delay for ICESAT
- CHIPS services on the pad :
  - N2 purge gas
  - Trickle charge
- Qualification by analysis wherever possible
- Flight operations support will be limited to separation confirmation and orbital elements upon release.

Future of GSFC's University Class Projects Missions

GSFC Leveraging the Wallops Integrated Flight Spectrum

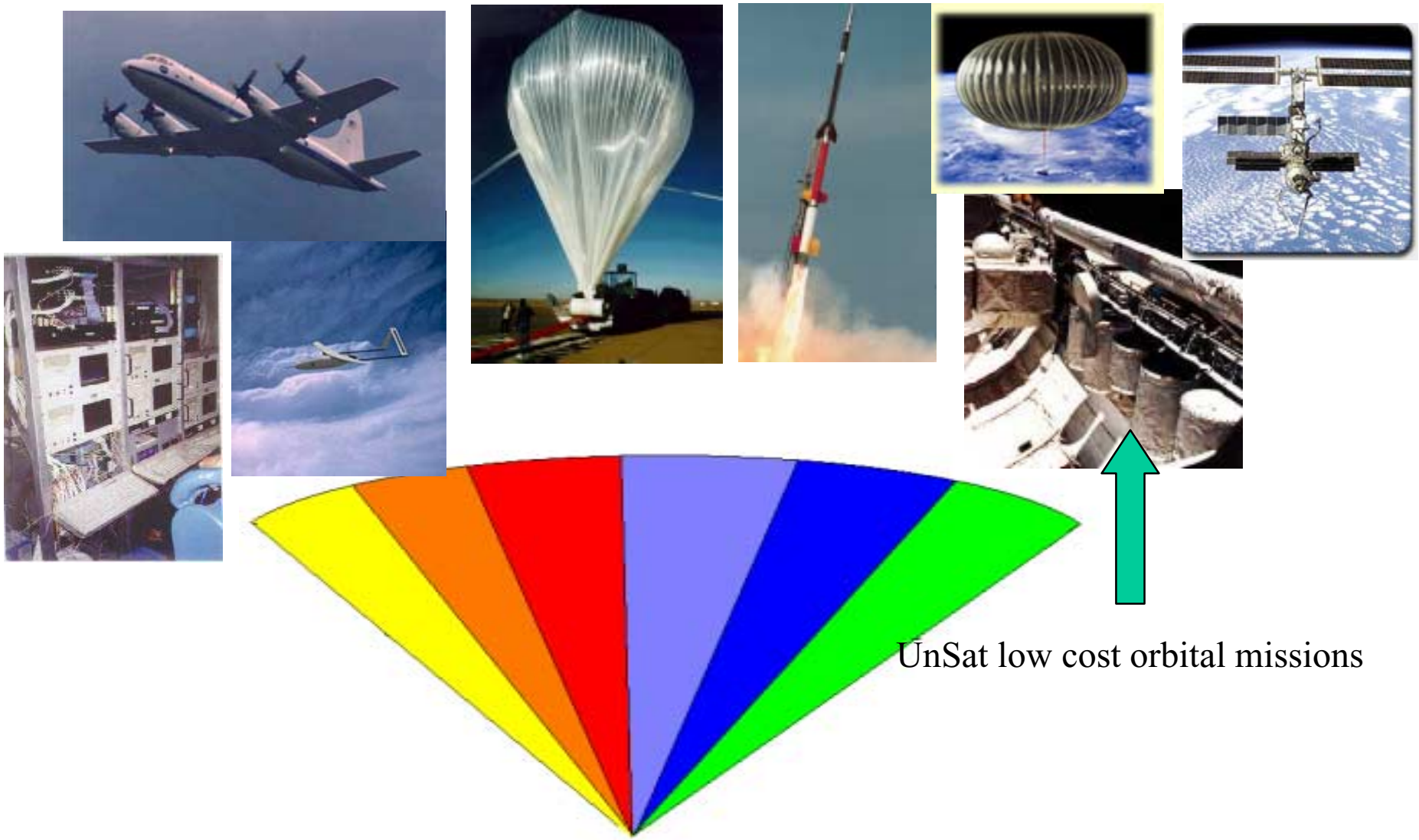

NASA/GSFC
UNEX Missions

GSFC's Future University Class Missions

- Wallops will continue to serve the agency by offering a low-cost university flight projects

- Wallops will facilitate missions while mitigating development risks associated with other sub-orbital programs of a 90% mission success flight rate.
  - Accept high risk, single string missions, with commercial parts and limited testing.

- Wallops will provide mission management coaching to PI team throughout project life cycle

- Wallops will provide additional project support services to PI team as requested, including:
  - Safety,QA, funding, scheduling, reporting and reviews and Integration and Test Facilities

- Wallops will continue to provide access to space using the Space Shuttle (STS) carriers
  - The Ejection systems developed for Shuttle-borne Hitchhiker carriers.
    - PES(Pallet Ejection System)/HES(Hitchhiker Ejection System)
    - Shuttle Hitchhiker Ejectable Launch System(SHELS)
  - Provide Shuttle Safety, Mission Integration and Engineering
    - Guide the PIs to meet STS requirements and through required reviews.

UNEX PERSPECTIVE ON FUTURE LAUNCH OPPORTUNITIES

UNEX read on Shuttle Launches

Shuttle Launch Opportunities

- NASA Headquarters currently assessing STS use
- Current Shuttle schedule baselined to 4 flights/year
  - 4 flights in 03, 5 in 04, with 4 flights per year in out years.
  - All STS flights are to station for ISS assembly.
- Competition for existing resources (lockers, mass, volume)
  - Back log of existing secondary payload flight opportunities under review
- Anticipate limited flight opportunities during ISS assembly Phase
  - Code M currently not accepting new requests for STS secondary opportunities pending review

Shuttle Carrier Systems Options

- Some manifest risk with all Shuttle carrier systems in next few years
- A Canister Mounted Ejection System (HES/PES) appears to offer best chance for manifesting
  - Pallet Ejection System is more utilized and requires less side wall space and Shuttle support
- SHELS is under development
  - SHELS has completed Vibration testing; will start TVac soon
  - SHELS takes up more space on side wall

Shuttle Carrier Systems Options

	HES (Hitchhiker Ejection System)	PES (Pallet Ejection System)	SHELS (Shuttle Hitchhiker Experiment Launch System)
Mass	150 lb.	150 lb.	400 lb.
Volume (height dependent on door/no door)	Ø19.00 x 20 in.	Ø19.00 x 28.87 in.	Ø26.00 x 45.00 in.
CG Requirement	Ø0.50 x 10.25 in. above sep. plane	Ø0.50 x 10.25 in. above sep. plane	Ø0.25 x 24.0 in. above sep. plane
Orbiter Interface	HH/GAS Canister	HH/GAS Canister	Adapter Beam Assembly (ABA)
Services Available to S/C	N/A	N/A	Power: 280 W Telemetry: 1200 baud async command & telemetry
Flight History	7	3	Under Development

Shuttle Carrier System Options

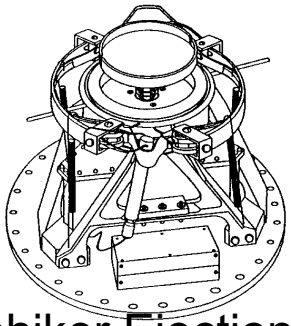

Hitchhiker Ejection System (HES)

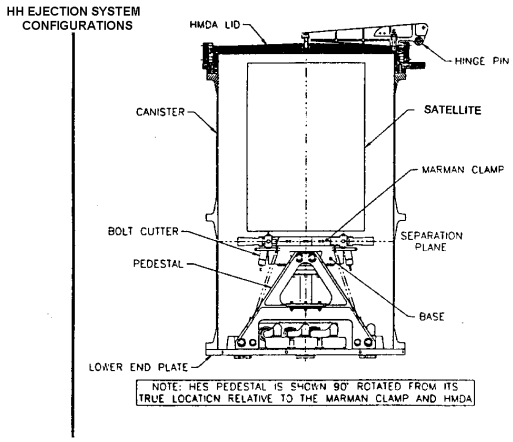

Pallet Ejection System (PES)

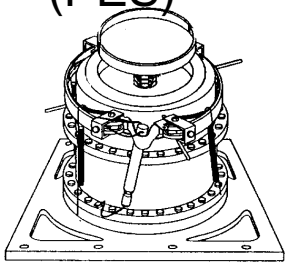

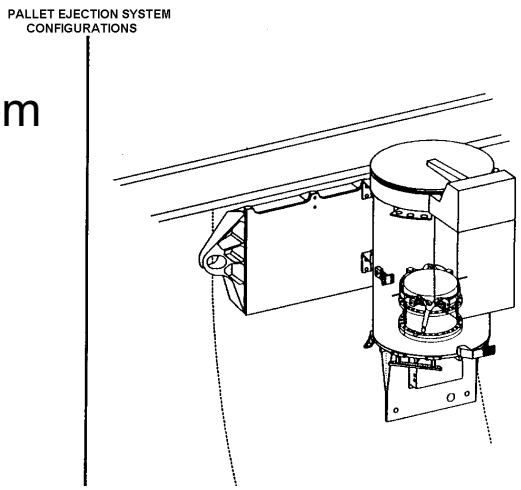

Shuttle Hitchhiker Ejectable Launch System (SHELS)

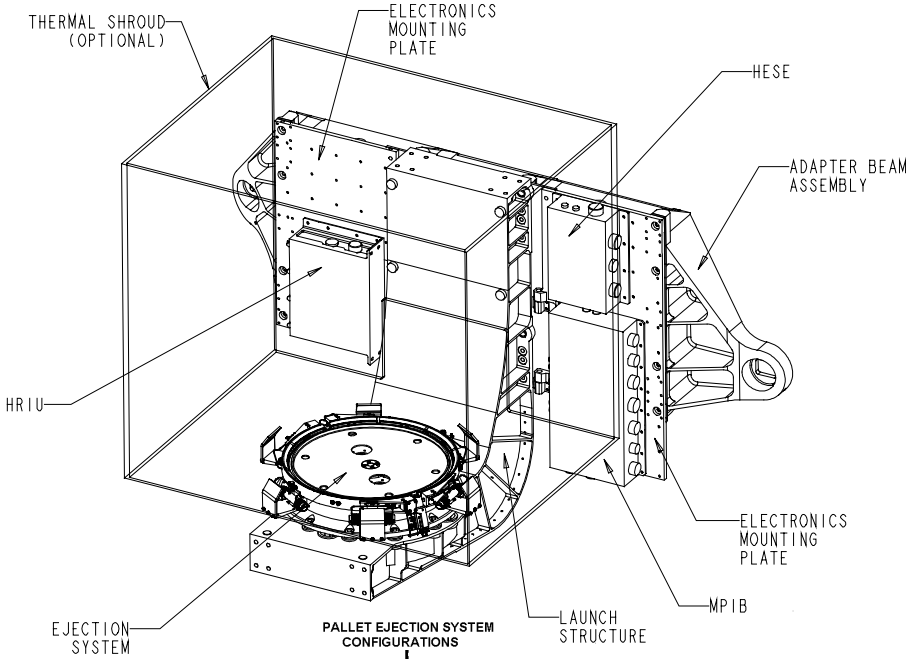

PALLET EJECTION SYSTEM CONFIGURATIONS

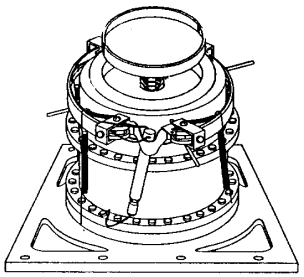

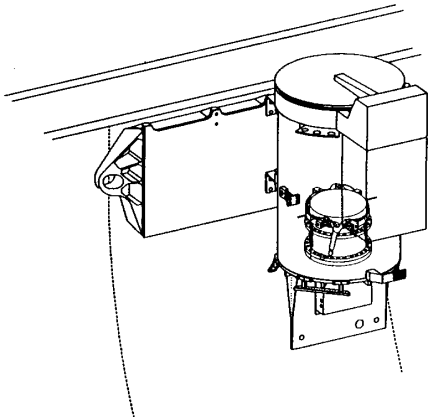

UNEX read on ELV opportunities

ELV Options

- Customers responsible for recurring, integration costs
- In next few years, there are small sat capabilities on Delta-II and Pegasus
  - Delta II < 50Kg $2-3M
  - Pegasus 192 Kg $3 M
- NASA/Code M studying secondaries on Delta IV and Atlas V and plans to fund non-recurring development of adapters to assure capability to users
  - EELV 200 Kg $ TBD

UNEX read on future UNEX/UnESS

Future University Class Mission Opportunities

- Affordable and reliable low cost access to space remains biggest hurdle for future of university class missions
- The agency risk posture toward university class missions will be based on what its riding on, and manifested with.
- NASA continues to be excited about university missions to provide hands on flight projects for next generation of scientists and engineers
- GSFC/Wallops continues to seek to meet university customers needs for fast, low cost flight projects.

NASA/GSFC
UNEX Missions

Contact Information:

- The University Class Projects Page:
  http://www.wff.nasa.gov/~code850/

- The Explorer Program Page:
  http://explorers.gsfc.nasa.gov

- The Earth Explorers Page:
  http://earthexplorers.gsfc.nasa.gov

David Pierce
(757) 824-1749
email: David.L.Pierce.1@gsfc.nasa.gov